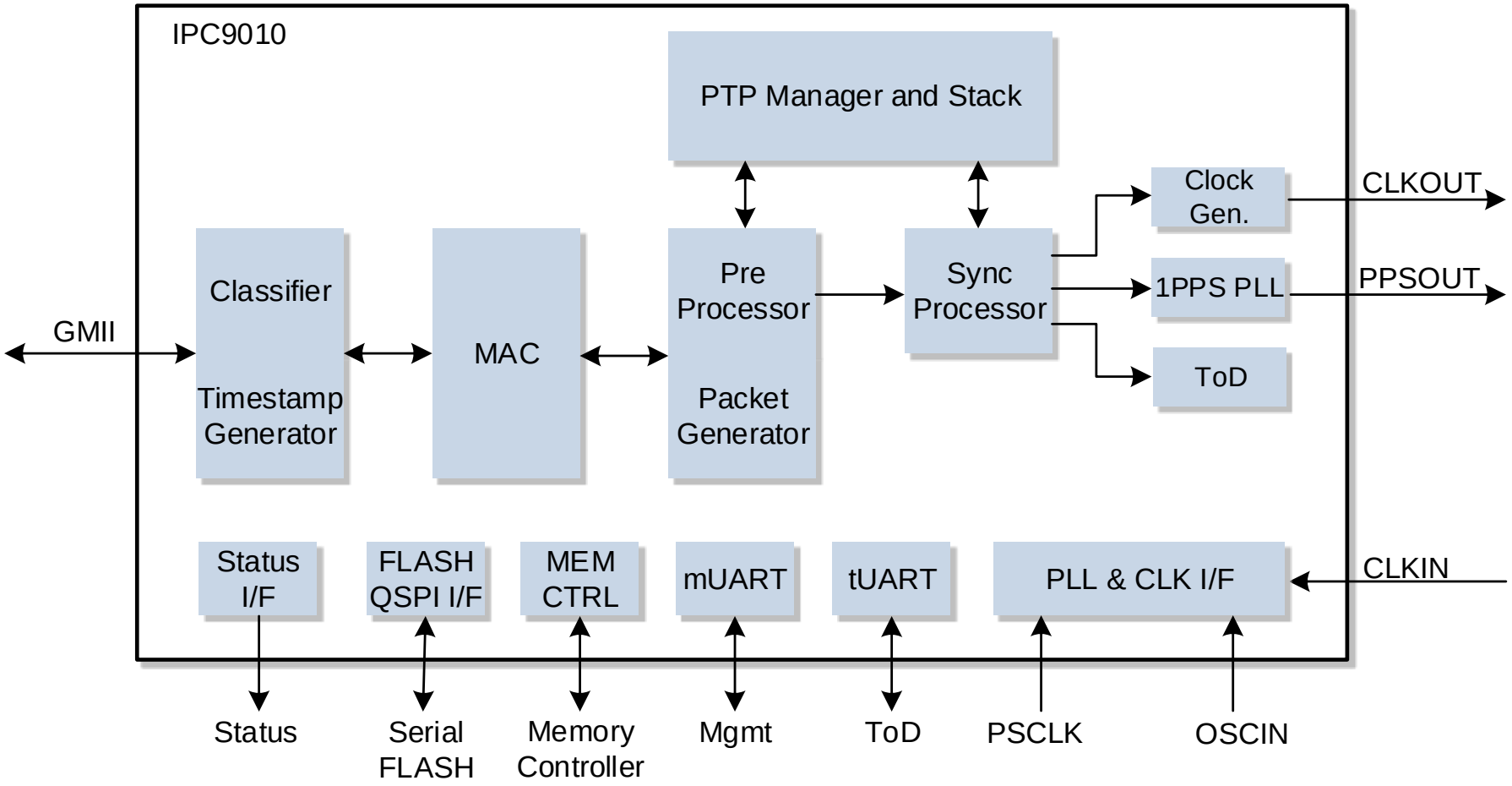
IPC9010
PTP Manager and Stack
Classifier
Timestamp Generator
MAC
Pre Processor
Packet Generator
Sync Processor
Clock Gen.
1PPS PLL
ToD
GMII
CLKOUT
PPSOUT
CLKIN
Status I/F
FLASH QSPI I/F
MEM CTRL
mUART
tUART
PLL & CLK I/F
Status
Serial FLASH
Memory Controller
Mgmt
ToD
PSCLK
OSCIN